data sheet

Colenta®

Colenta New Generation
140 RA4 Widetrack

WideTrackProcessor

140 RA4 80 4Tank WASH Eco

140 RA4 80 5Tank WASH Eco

Colenta®

QUALITY SYSTEM CERTIFICATION
DNV·GL
ISO 9001

Colenta Paper Processor - Available for RA4 Print / Duratrans for both digital and conventional applications.

06/2022 AN

Colenta® WideTrack Processor
140 RA4 80 4/5Tank WASH Eco

Technical Specifications:

Processing applications: RA4 Print / Display Media for both digital and conventional applications.

Process width: **140** RA 80...max. 140 cm (55 inch)

Microprocessor Control: - with 6 pre-programmable processing cycles

Transport Speed (at 45 sec DEV-Time): - **140 RA 80**cm/min (32 inch/min)
(Dev time is pre-programmable)

Tank capacities:		**140 RA 80 4Tank Wash**	**140 RA 80 4Tank Wash**
Developer	:	37 lt (incl filter)	37 lt (incl filter)
Bleachfix	:	28 lt (incl filter)	28 lt (incl filter)
Wash 1	:	27 lt	27 lt
Wash 2	:	27 lt	27 lt
Wash 3	:	N/A	27 lt

All Colenta Wide Track models are micro processor controlled and provide a fully automatic Dry to Dry service for both cut sheet and long roll through a well proven minimum contact hard roller transport system.

Dual programme facilities provide a fast change between RC Print and Display production modes and allow complete flexibility for programming parameters to meet precise process requirements.

Replenishment: - precisely controlled using opto-sensors to measure the area loading.
- activated after a pre-set print/film area is fed into the processor

High efficiency drying: An integrated flat path warm air drying system with airknives

Temperatures: All solution temperatures are accurately controlled and monitored with automatic cooling.

Transport: Drive motor: precisely controlled by electronic feed-back to ensure consistant developer timing

Standard Accessories:-

Level control for all Processing tanks
Rack Carrier/Drip Tray
Replenishment storage tanks
water supply / drain connectors

Optional Accessories:

Inbuild Roll feed unit to include into the light tight feed box and long roll feed cradle with spool bobbins

Motorised Roll Take-Up
extra spool bobbins
water supply panel
2 position chemical mixing concole (2x40L / 2x80L)

Technical specification subject to change without notice.

Transport system: 140 RA4 80 - 4T WASH Eco

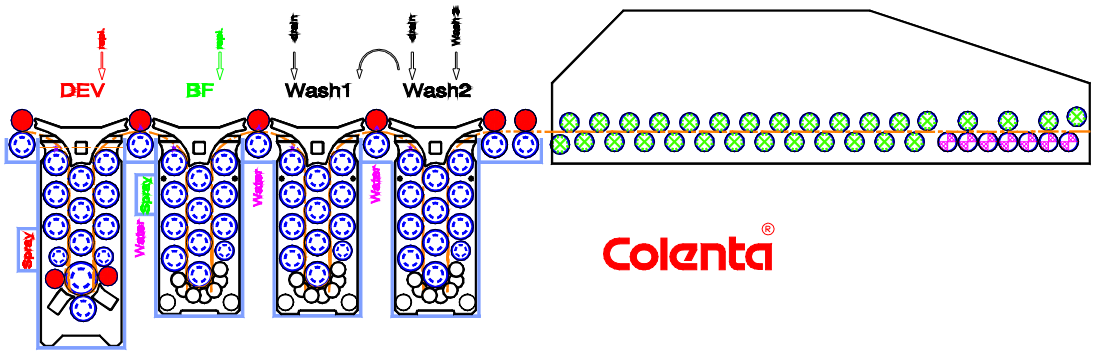

Transport system: 140 RA4 80 - 5T WASH Eco

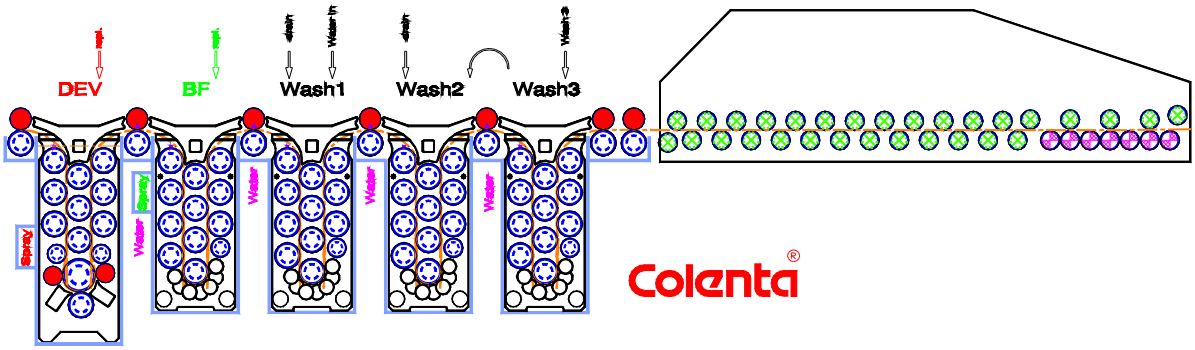

All transport modules (racks) and tanks are designed to reduce chemical oxidation to an absolute minimum. This together with our accurate replenishment, temperature control and constant circulation ensures all processing parameters are maintained within pre-set programmable limits.

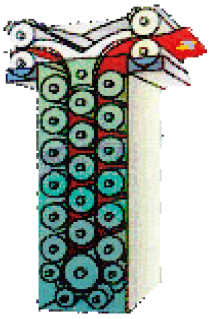

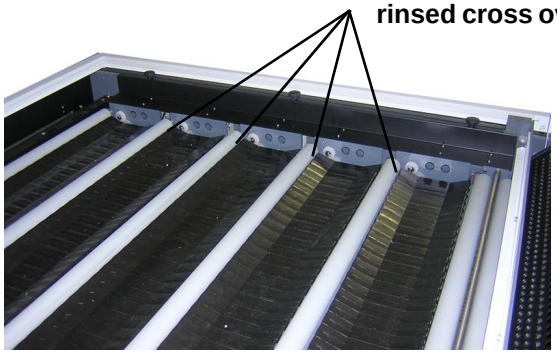

Water rinsed cross over rollers are in place in order to minimize the chemical carry over from one tank to the next as well to keep the cross over section clean and free from any chemical deposits.

electronic cabinte with lid to open

DIMENSIONS:

140 RA 80 4Tank Wash Eco

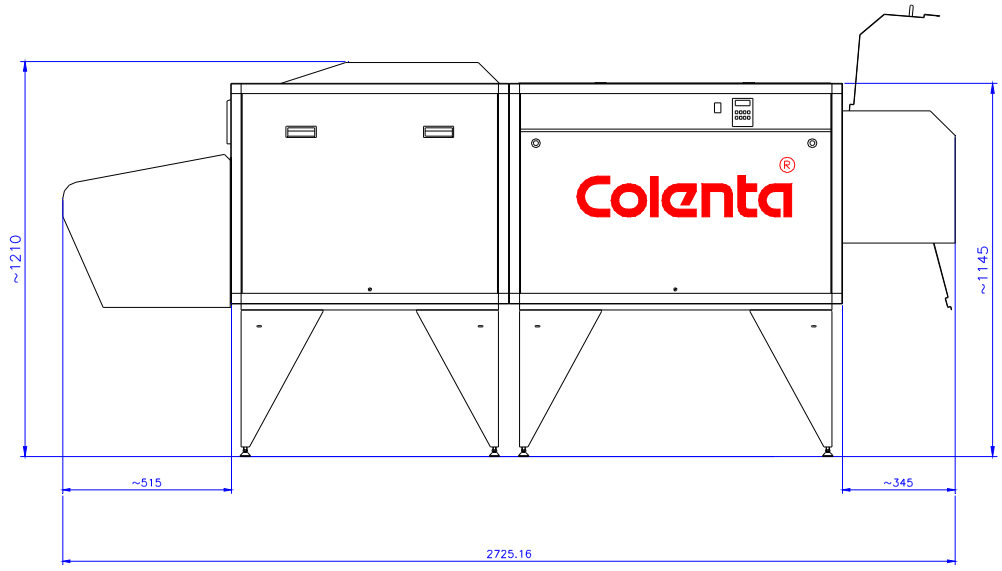

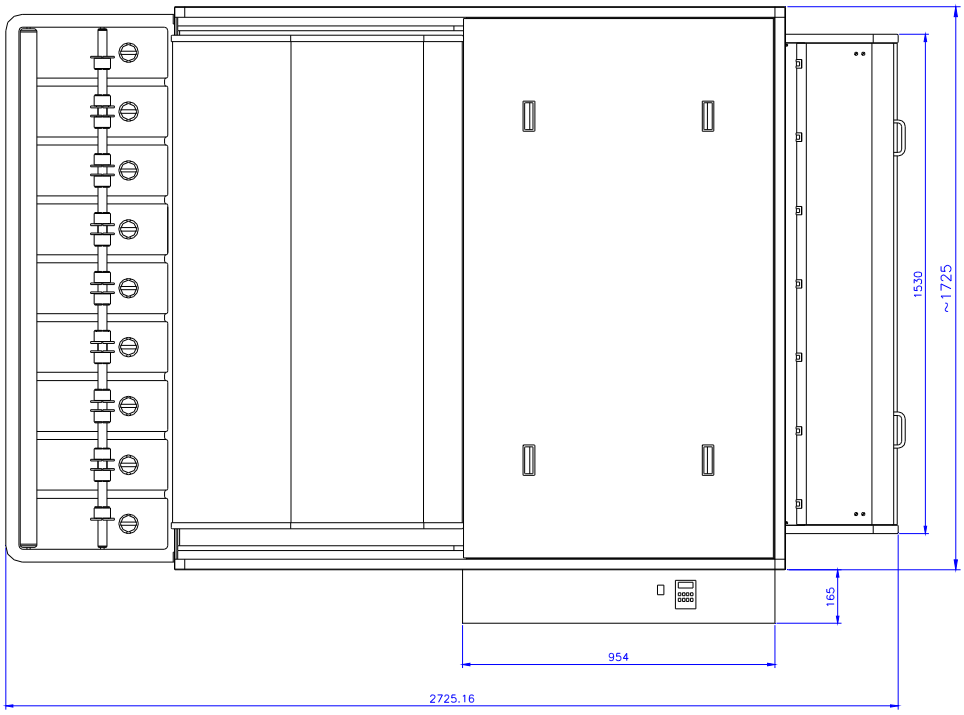

**.....all the dimenssion in MM

We recommend a minimum walking space of 60cm around the processor.

DIMENSIONS:

140 RA 80 5Tank Wash Eco

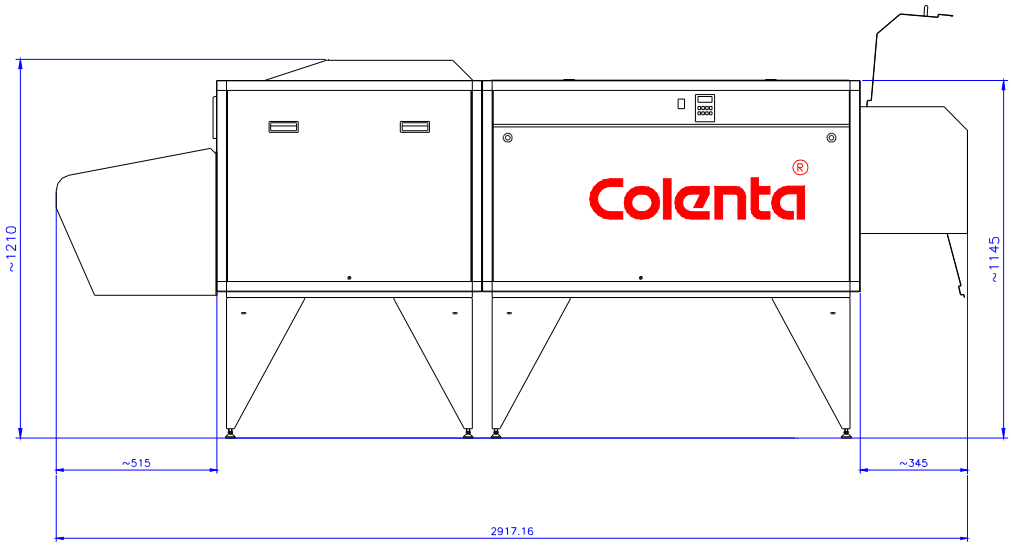

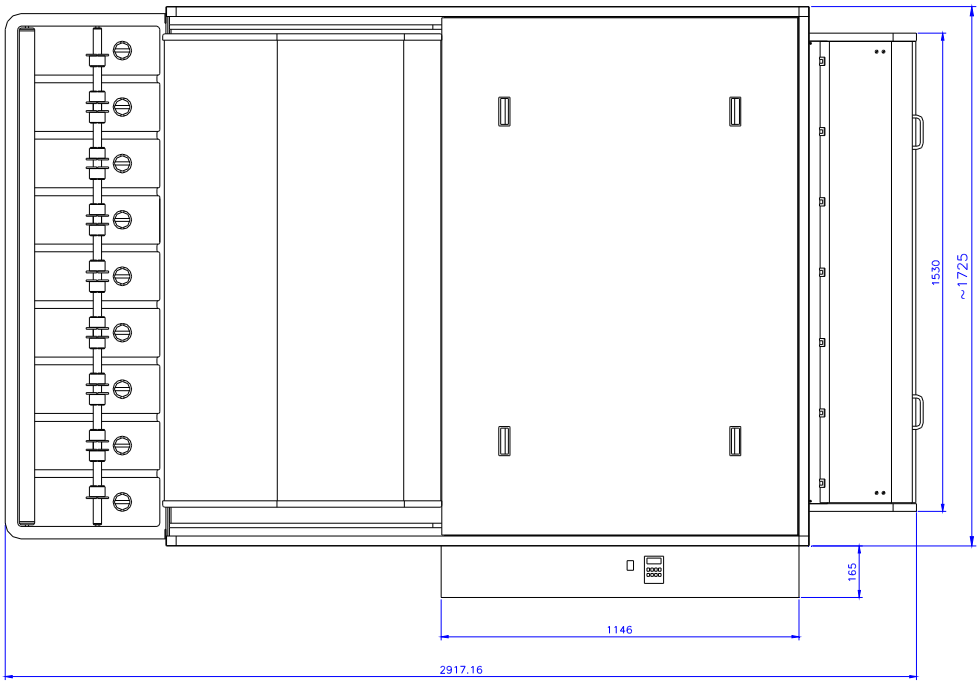

**.....all the dimenssion in MM

We recommend a minimum walking space of 60cm around the processor.

Specifications for wall-opening when the processor has to be installed that way:

140 RA 80 4/5Tank Wash Eco

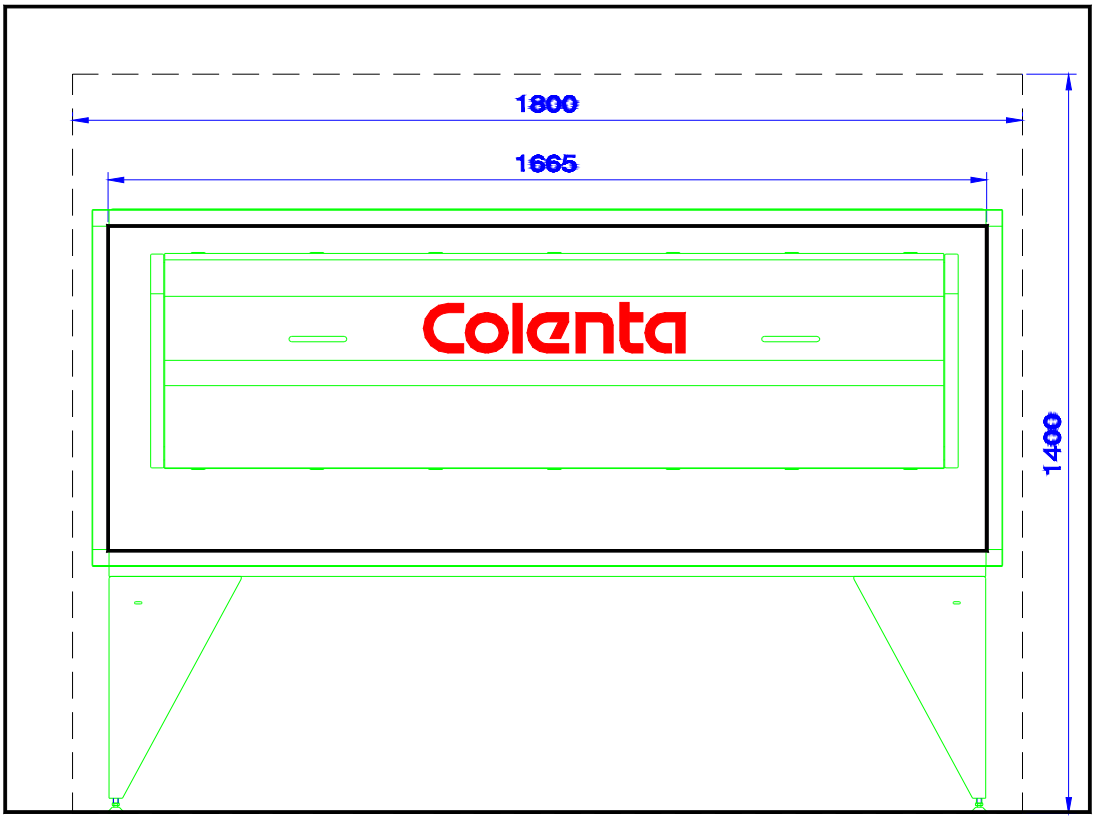

In case the thickness of the wall is more than 2cm, a panel has to be installed this to keep the cover lid of the processor in position - as shown below:

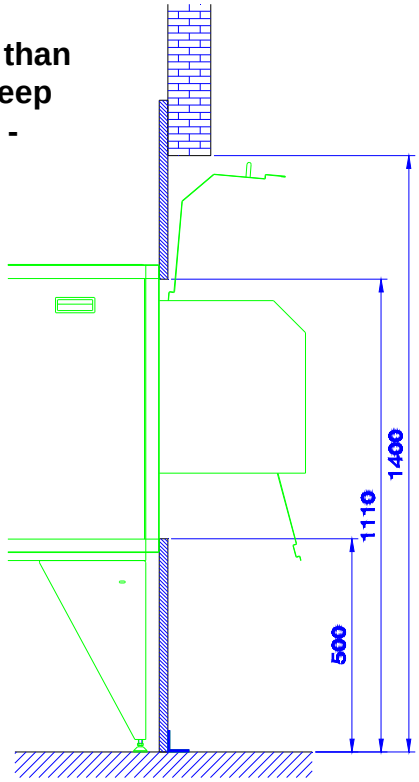

Electrical supply:

Colenta®

Standard, when 3N~400/230V, 50/60 Hz supply available

Total power consumption:
140 RA4 80 4 Tank WASH Eco .....14.5 kW 140 RA4 80 5 Tank WASH Eco ..... 14.5 kW

Standard supply net:
3N-400/230 VAC 56/60Hz

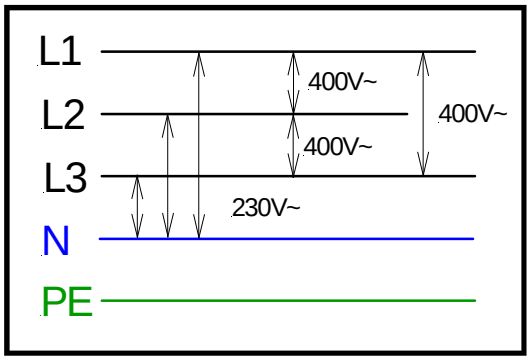

Alternatively:
3x230V 50/60 Hz

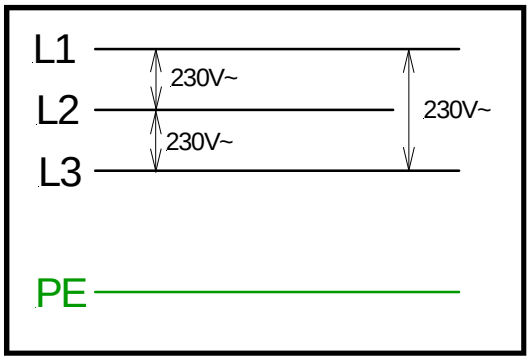

Single phase connections (230VAC - 50/60Hz) on request only.

To be indicated and confirmed when ordering!

Details for shipment:

Colenta®

COLENTA 140 RA4 80 4Tank WASH Eco	COLENTA 140 RA4 80 5Tank WASH Eco
Collo 1: 200x120x140cm, 310 kg Collo 2: 174x160x110cm, 600kg Collo 3: 200x200x140cm, 620kg	Collo 1: 200x120x140cm, 310 kg Collo 2: 174x160x110cm, 600kg Collo 3: 200x200x140cm, 620kg

Colenta® *Wide Track RA4 Paper Processor - optional accessories :*

Colenta®
Water Supply Panel assy
(see extra documentation)

Colenta®
2x40L / 2x80L Mixing Concole
(see extra documentation)

Colenta®
140 roll feed assy

Colenta®
140 motorized roll take up assy